STL150N3LLH6

N-channel 30 V, 0.0016 Ω, 33 A PowerFLAT™ (5x6) STripFET™ VI DeepGATE™ Power MOSFET

Features

Type	V_{DSS}	$R_{DS(on)}$ max	I_D
STL150N3LLH6	30 V	0.002 Ω	33 A (1)

1. The value is rated according $R_{thj-pcb}$

- $R_{DS(on)}$ * Q_g industry benchmark
- Extremely low on-resistance $R_{DS(on)}$
- High avalanche ruggedness
- Low gate drive power losses
- Very low switching gate charge

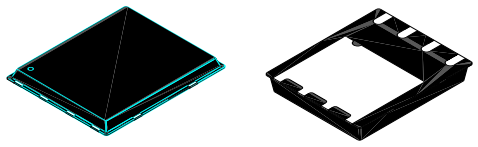

PowerFLAT™ (5x6)

Application

Switching applications

Description

The STL150N3LLH6 is a N-channel 30 V. This product utilizes the 6th generation of design rules of ST's proprietary STripFET™ technology, with a new gate structure.The resulting Power MOSFET exhibits the lowest $R_{DS(on)}$ in all packages.

Figure 1. Internal schematic diagram

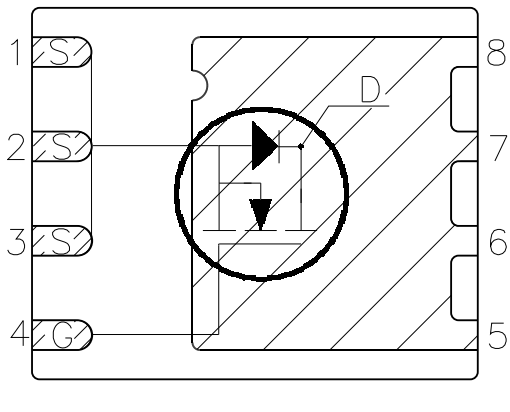

Table 1. Device summary

Order code	Marking	Package	Packaging
STL150N3LLH6	150N3LLH6	PowerFLAT™ (5x6)	Tape and reel

Contents

1 Electrical ratings 3

2 Electrical characteristics 4

2.1 Electrical characteristics (curves) 6

3 Test circuits 8

4 Package mechanical data 9

5 Revision history 11

1 Electrical ratings

Table 2. Absolute maximum ratings

Symbol	Parameter	Value	Unit
V_{DS}	Drain-source voltage (V_{GS} = 0)	30	V
V_{GS}	Gate-source voltage	± 20	V
I_D (1)	Drain current (continuous) at T_C = 25 °C	150	A
I_D (1)	Drain current (continuous) at T_C = 100 °C	93	A
I_D (2)	Drain current (continuous) at T_C = 25 °C	33	A
I_D (2)	Drain current (continuous) at T_C=100 °C	20.8	A
I_{DM} (3)	Drain current (pulsed)	132	A
P_{TOT} (1)	Total dissipation at T_C = 25 °C	80	W
P_{TOT} (3)	Total dissipation at T_C = 25 °C	4	W
	Derating factor	0.03	W/°C
T_J T_{stg}	Operating junction temperature Storage temperature	-55 to 150	°C

1. The value is rated according R_{thj-c}
2. The value is rated according $R_{thj-pcb}$
3. Pulse width limited by safe operating area

Table 3. Thermal resistance

Symbol	Parameter	Value	Unit
$R_{thj-case}$	Thermal resistance junction-case (drain) (steady state)	1.56	°C/W
$R_{thj-pcb}$ (1)	Thermal resistance junction-ambient	31.3	°C/W

1. When mounted on FR-4 board of 1inch², 2oz Cu, t < 10 sec

Table 4. Avalanche data

Symbol	Parameter	Value	Unit
I_{AV}	Not-repetitive avalanche current, (pulse width limited by Tj Max)	20	A
E_{AS}	Single pulse avalanche energy (starting T_J = 25 °C, I_D = I_{AV})	200	mJ

2 Electrical characteristics

(T_{CASE} = 25 °C unless otherwise specified)

Table 5. On/off states

Symbol	Parameter	Test conditions	Min.	Typ.	Max.	Unit
$V_{(BR)DSS}$	Drain-source breakdown voltage	I_D = 250 µA, V_{GS}= 0	30			V
I_{DSS}	Zero gate voltage drain current (V_{GS} = 0)	V_{DS} = Max rating, V_{DS} = Max rating @125 °C			1 10	µA µA
I_{GSS}	Gate body leakage current (V_{DS} = 0)	V_{GS} = ±20 V			±100	nA
$V_{GS(th)}$	Gate threshold voltage	V_{DS}= V_{GS}, I_D = 250 µA	1			V
$R_{DS(on)}$	Static drain-source on resistance	V_{GS}= 10 V, I_D= 16.5 A V_{GS}= 4.5 V, I_D= 16.5 A		0.0016 0.0025	0.002 0.0034	Ω Ω

Table 6. Dynamic

Symbol	Parameter	Test conditions	Min.	Typ.	Max.	Unit
C_{iss} C_{oss} C_{rss}	Input capacitance Output capacitance Reverse transfer capacitance	V_{DS} = 25 V, f=1 MHz, V_{GS}=0	-	4040 740 425	-	pF pF pF
Q_g Q_{gs} Q_{gd}	Total gate charge Gate-source charge Gate-drain charge	V_{DD}=15 V, I_D = 33 A V_{GS} =4.5 V *(see Figure 14)*	-	40 16.3 15.8	-	nC nC nC
R_G	Gate input resistance	f=1 MHz Gate DC Bias = 0 Test signal level = 20 mV open drain	-	1.4	-	Ω

Table 7. Switching times

Symbol	Parameter	Test conditions	Min.	Typ.	Max.	Unit
$t_{d(on)}$ t_r $t_{d(off)}$ t_f	Turn-on delay time Rise time Turn-off delay time Fall time	V_{DD}=15 V, I_D= 16.5 A, R_G=4.7 Ω, V_{GS}=10 V *(see Figure 13)*	-	17 18 75 46	-	ns ns ns ns

Table 8. Source drain diode

Symbol	Parameter	Test conditions	Min.	Typ.	Max.	Unit
I_{SD}	Source-drain current		-		33	A
I_{SDM}(1)	Source-drain current (pulsed)		-		132	A
V_{SD}(2)	Forward on voltage	I_{SD} = 33 A, V_{GS}=0	-		1.1	V
t_{rr} Q_{rr} I_{RRM}	Reverse recovery time Reverse recovery charge Reverse recovery current	I_{SD} = 33 A, di/dt = 100 A/µs, V_{DD}=25 V	-	34 35 2.1		ns nC A

1. Pulse width limited by safe operating area
2. Pulsed: pulse duration=300µs, duty cycle 1.5%

2.1 Electrical characteristics (curves)

Figure 2. Safe operating area

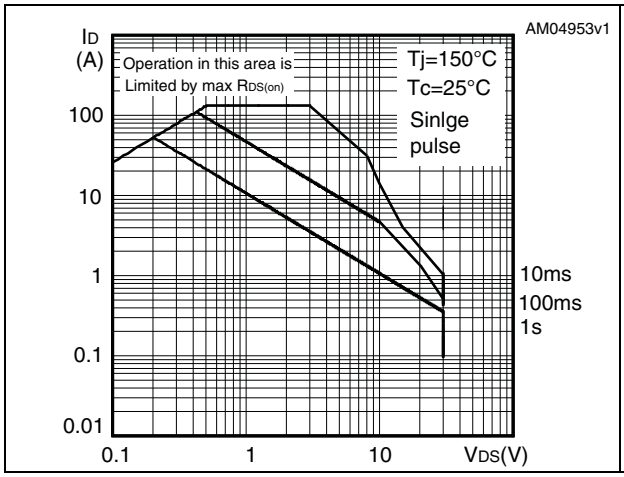

Figure 3. Thermal impedance

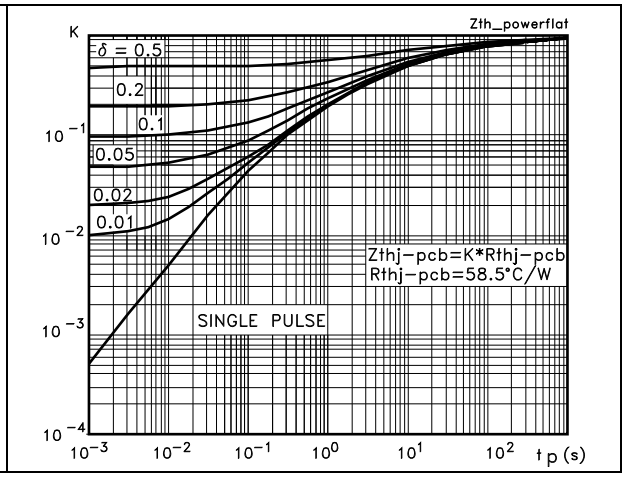

Figure 4. Output characteristics

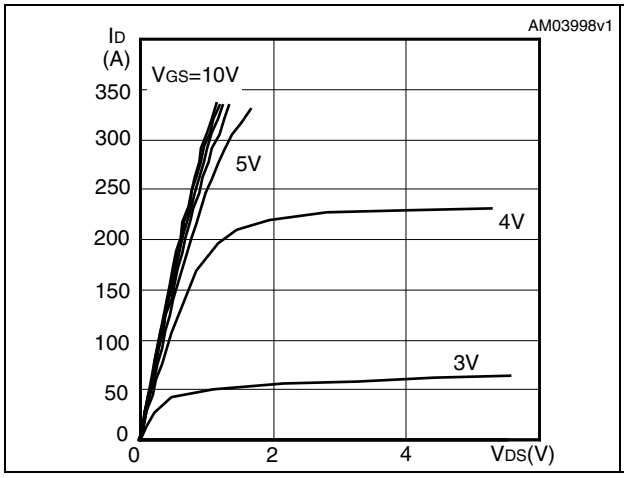

Figure 5. Transfer characteristics

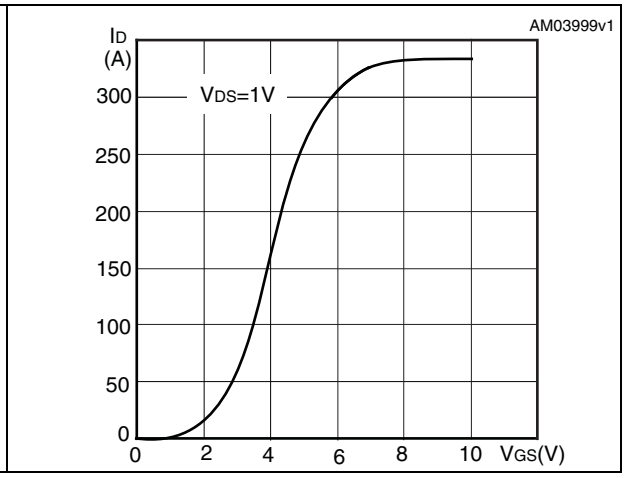

Figure 6. Normalized BV_{DSS} vs temperature

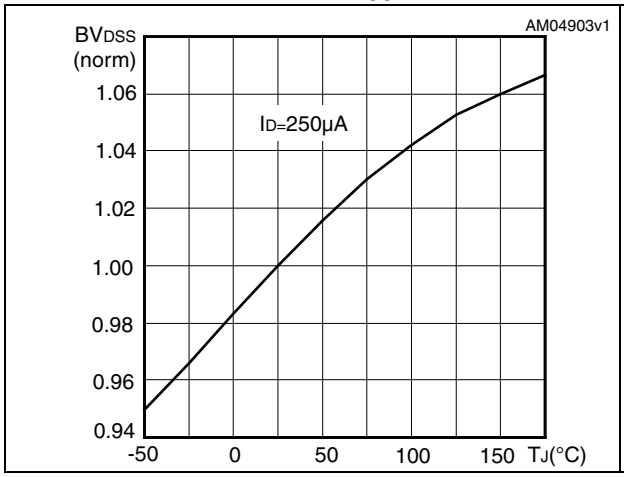

Figure 7. Static drain-source on resistance

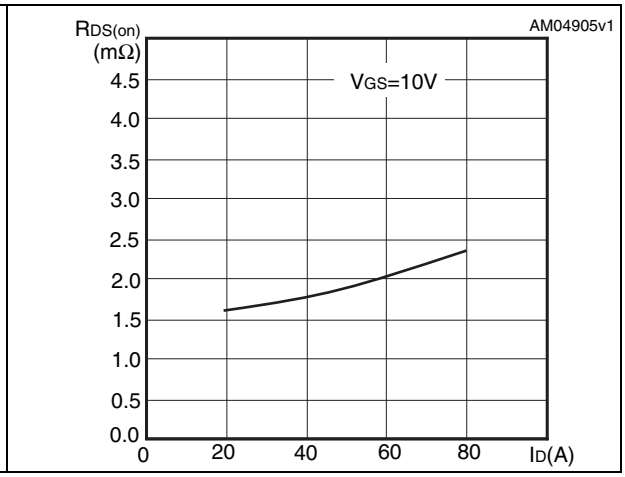

Figure 8. Gate charge vs gate-source voltage

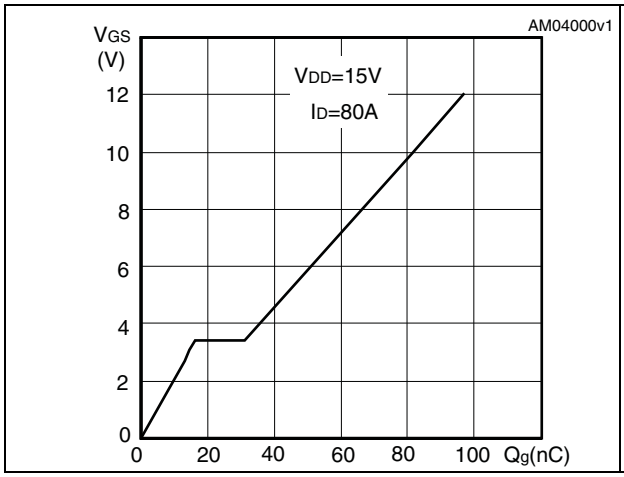

Figure 9. Capacitance variations

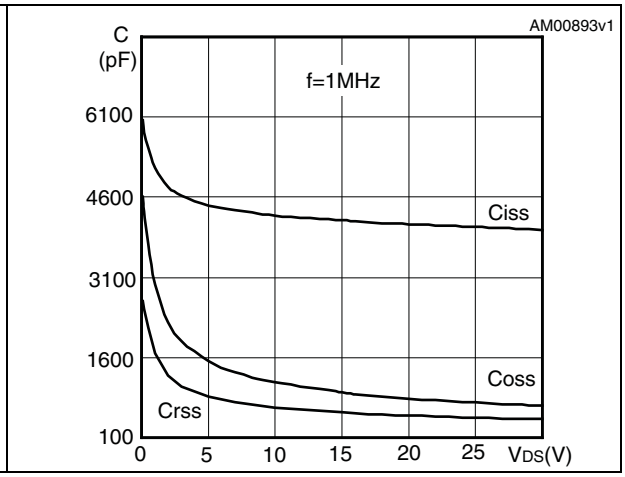

Figure 10. Normalized gate threshold voltage vs temperature

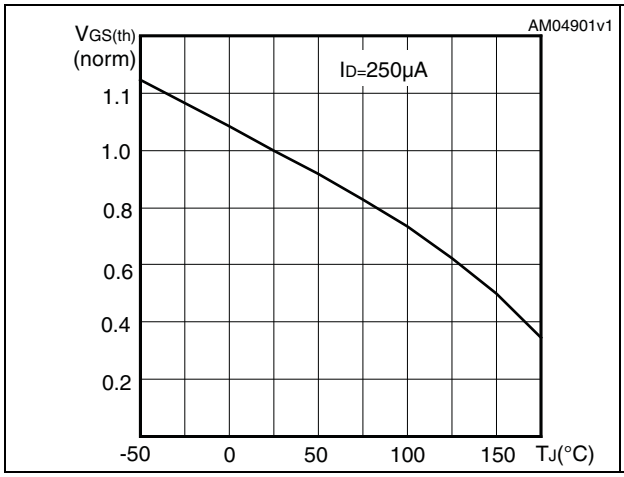

Figure 11. Normalized on resistance vs temperature

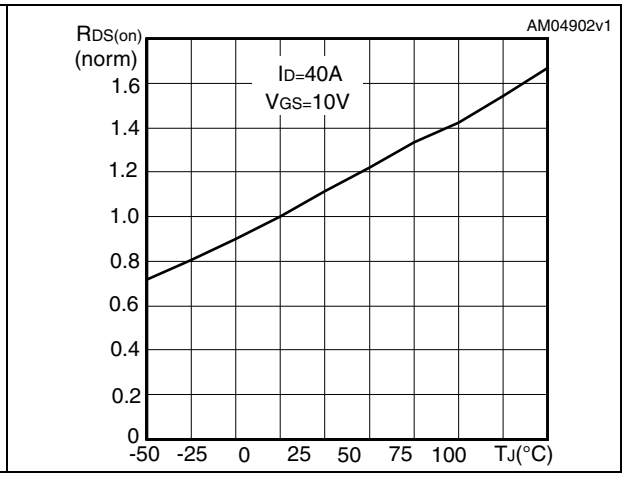

Figure 12. Source-drain diode forward characteristics

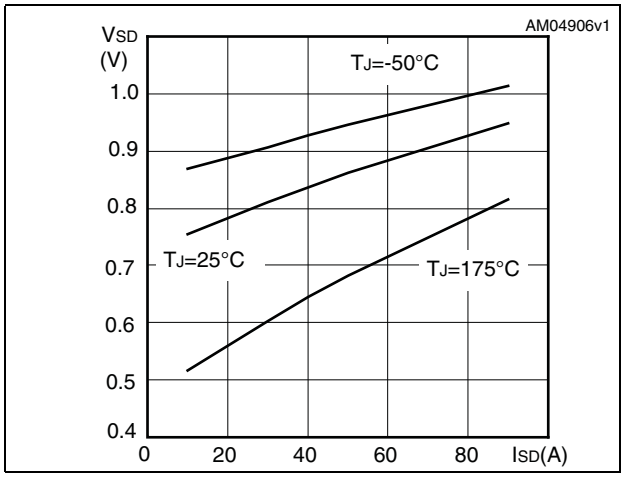

3 Test circuits

Figure 13. Switching times test circuit for resistive load

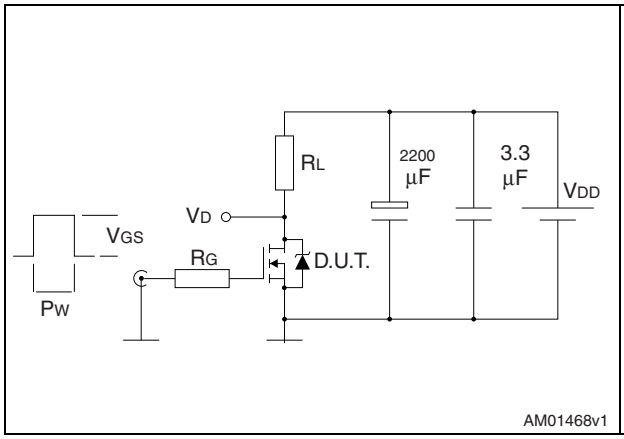

Figure 14. Gate charge test circuit

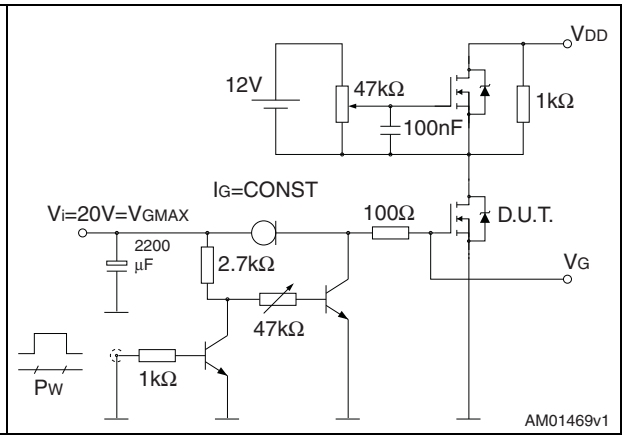

Figure 15. Test circuit for inductive load switching and diode recovery times

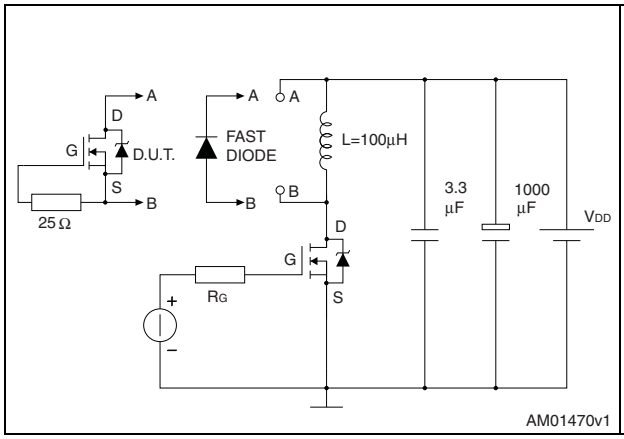

Figure 16. Unclamped inductive load test circuit

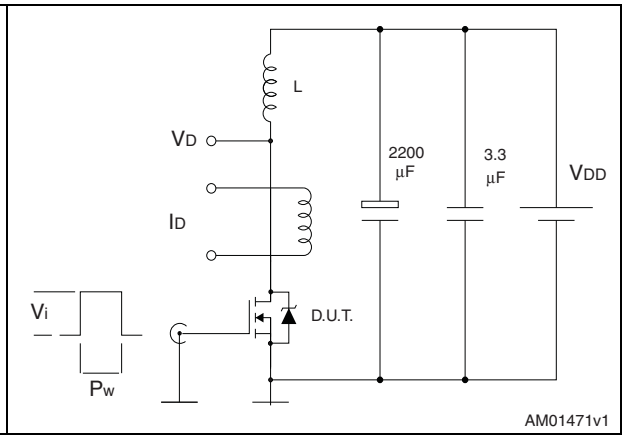

Figure 17. Unclamped inductive waveform

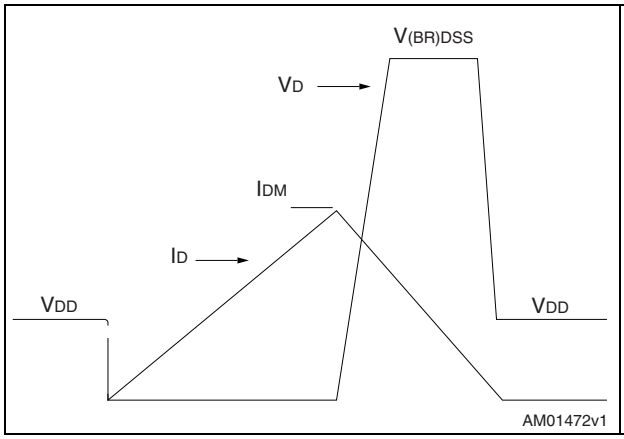

Figure 18. Switching time waveform

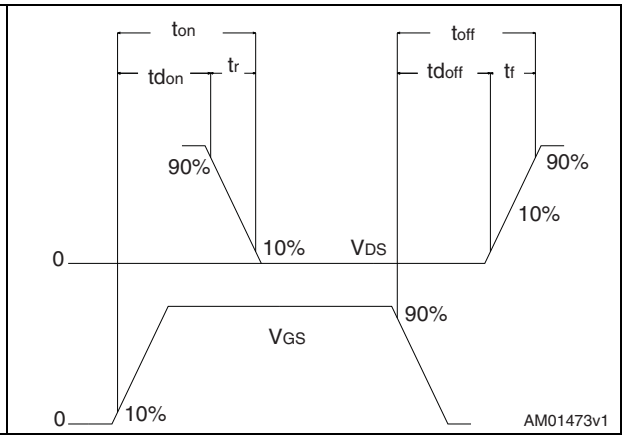

4 Package mechanical data

In order to meet environmental requirements, ST offers these devices in different grades of ECOPACK® packages, depending on their level of environmental compliance. ECOPACK® specifications, grade definitions and product status are available at: www.st.com. ECOPACK is an ST trademark.

PowerFLAT™(5x6) mechanical data

DIM.	mm.			inch		
	Min.	Typ.	Max.	Min.	Typ.	Max.
A	0.80	0.83	0.93	0.031	0.32	0.036
A1		0.02	0.05		0.0007	0.0019
A3		0.20			0.007	
b	0.35	0.40	0.47	0.013	0.015	0.018
D		5.00			0.196	
D1		4.75			0.187	
D2	4.15	4.20	4.25	0.163	0.165	0.167
E		6.00			0.236	
E1		5.75			0.226	
E2	3.43	3.48	3.53	0.135	0.137	0.139
E4	2.58	2.63	2.68		0.103	0.105
e		1.27			0.050	
L	0.70	0.80	0.90	0.027	0.031	0.035

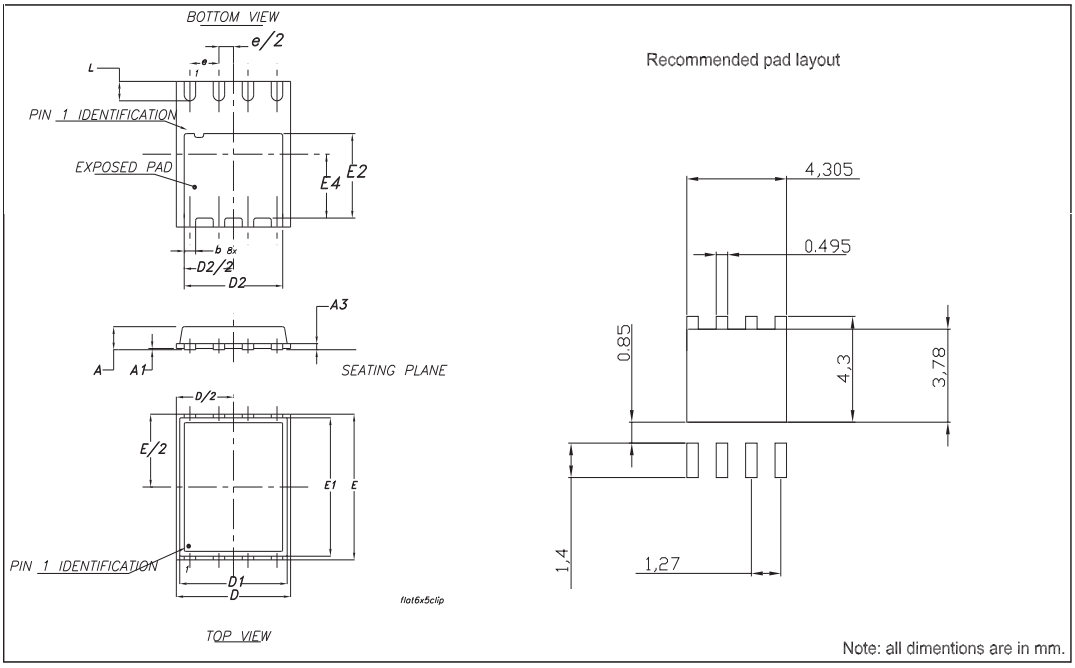

5 Revision history

Table 9. Document revision history

Date	Revision	Changes
21-Jan-2009	1	First release
08-Sep-2009	2	Document status promoted from preliminary data to datasheet
11-Nov-2010	3	Corrected title in first page $R_{DS(on)}$ max value has been corrected.

Please Read Carefully:

Information in this document is provided solely in connection with ST products. STMicroelectronics NV and its subsidiaries (“ST”) reserve the right to make changes, corrections, modifications or improvements, to this document, and the products and services described herein at any time, without notice.

All ST products are sold pursuant to ST’s terms and conditions of sale.

Purchasers are solely responsible for the choice, selection and use of the ST products and services described herein, and ST assumes no liability whatsoever relating to the choice, selection or use of the ST products and services described herein.

No license, express or implied, by estoppel or otherwise, to any intellectual property rights is granted under this document. If any part of this document refers to any third party products or services it shall not be deemed a license grant by ST for the use of such third party products or services, or any intellectual property contained therein or considered as a warranty covering the use in any manner whatsoever of such third party products or services or any intellectual property contained therein.

UNLESS OTHERWISE SET FORTH IN ST’S TERMS AND CONDITIONS OF SALE ST DISCLAIMS ANY EXPRESS OR IMPLIED WARRANTY WITH RESPECT TO THE USE AND/OR SALE OF ST PRODUCTS INCLUDING WITHOUT LIMITATION IMPLIED WARRANTIES OF MERCHANTABILITY, FITNESS FOR A PARTICULAR PURPOSE (AND THEIR EQUIVALENTS UNDER THE LAWS OF ANY JURISDICTION), OR INFRINGEMENT OF ANY PATENT, COPYRIGHT OR OTHER INTELLECTUAL PROPERTY RIGHT.

UNLESS EXPRESSLY APPROVED IN WRITING BY AN AUTHORIZED ST REPRESENTATIVE, ST PRODUCTS ARE NOT RECOMMENDED, AUTHORIZED OR WARRANTED FOR USE IN MILITARY, AIR CRAFT, SPACE, LIFE SAVING, OR LIFE SUSTAINING APPLICATIONS, NOR IN PRODUCTS OR SYSTEMS WHERE FAILURE OR MALFUNCTION MAY RESULT IN PERSONAL INJURY, DEATH, OR SEVERE PROPERTY OR ENVIRONMENTAL DAMAGE. ST PRODUCTS WHICH ARE NOT SPECIFIED AS "AUTOMOTIVE GRADE" MAY ONLY BE USED IN AUTOMOTIVE APPLICATIONS AT USER’S OWN RISK.

Resale of ST products with provisions different from the statements and/or technical features set forth in this document shall immediately void any warranty granted by ST for the ST product or service described herein and shall not create or extend in any manner whatsoever, any liability of ST.

ST and the ST logo are trademarks or registered trademarks of ST in various countries.

Information in this document supersedes and replaces all information previously supplied.

The ST logo is a registered trademark of STMicroelectronics. All other names are the property of their respective owners.

© 2010 STMicroelectronics - All rights reserved

STMicroelectronics group of companies

Australia - Belgium - Brazil - Canada - China - Czech Republic - Finland - France - Germany - Hong Kong - India - Israel - Italy - Japan - Malaysia - Malta - Morocco - Philippines - Singapore - Spain - Sweden - Switzerland - United Kingdom - United States of America

www.st.com

Mouser Electronics

Authorized Distributor

Click to View Pricing, Inventory, Delivery & Lifecycle Information:

STMicroelectronics:

STL150N3LLH6